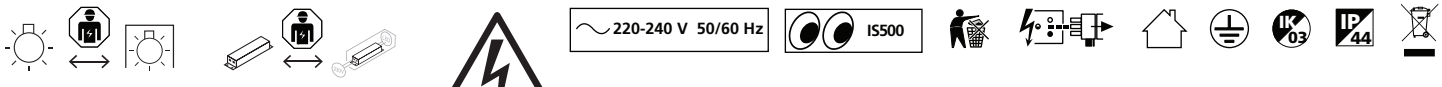

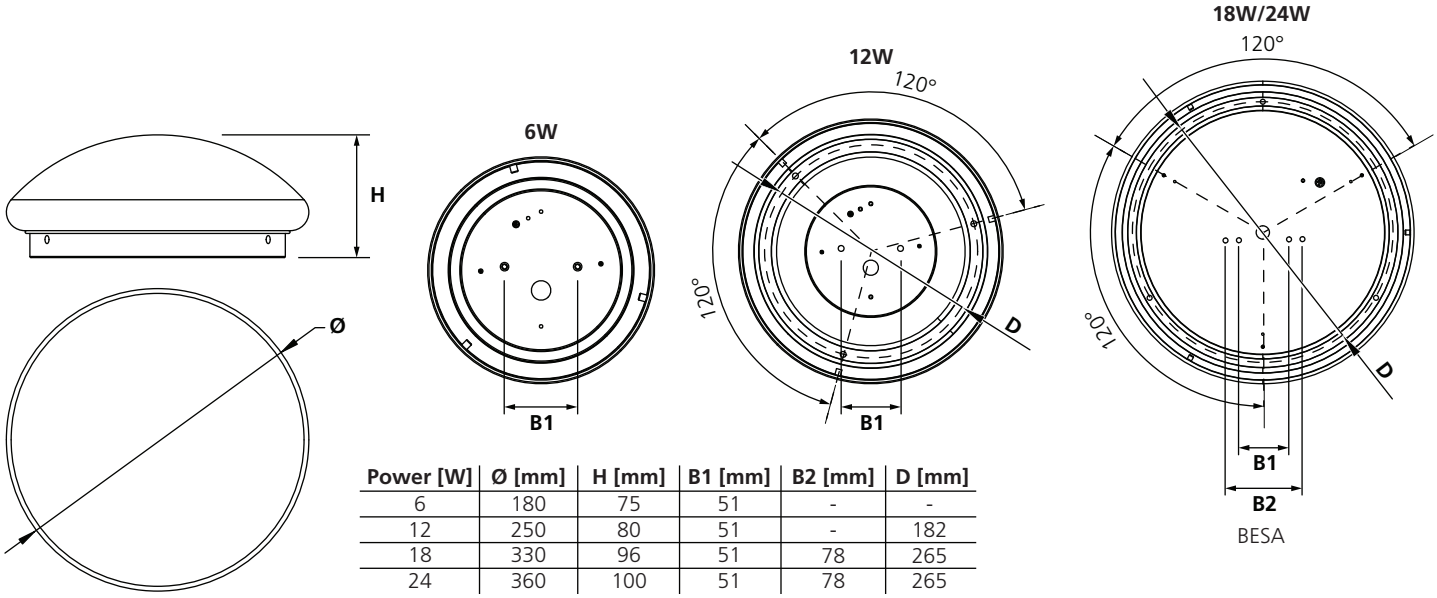

Power [W]	Ø [mm]	H [mm]	B1 [mm]	B2 [mm]	D [mm]
6	180	75	51	-	-
12	250	80	51	-	182
18	330	96	51	78	265
24	360	100	51	78	265

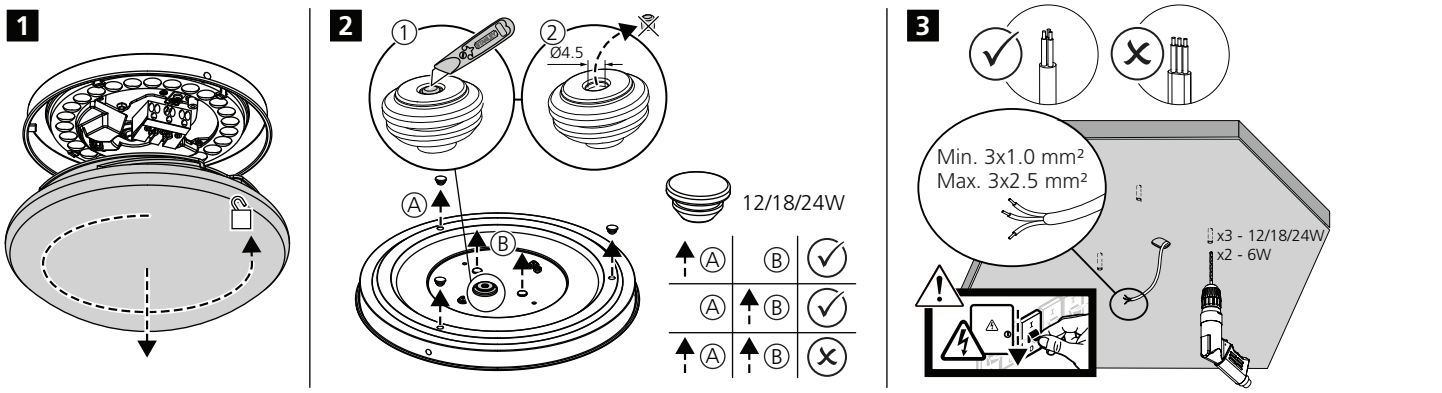

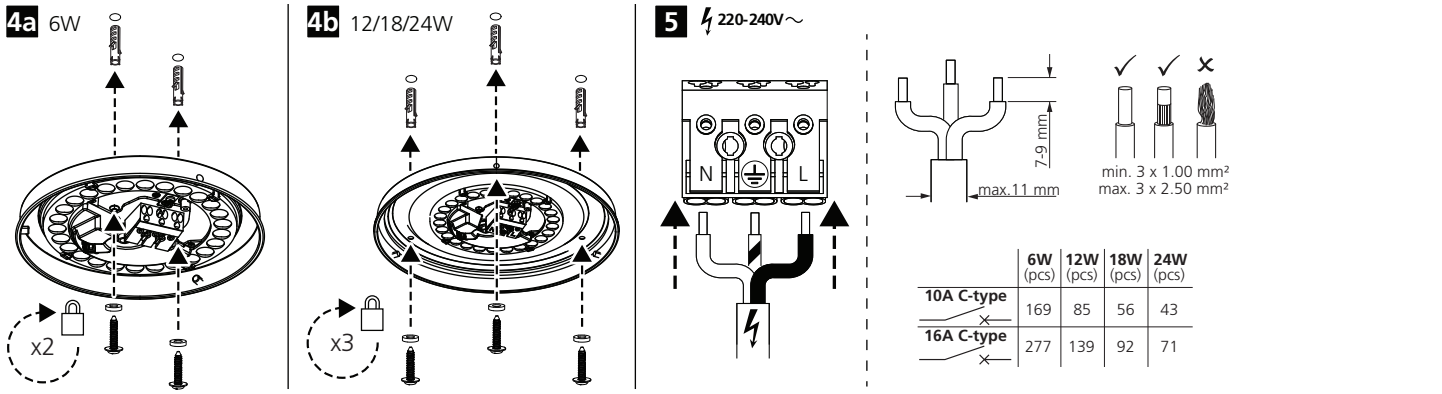
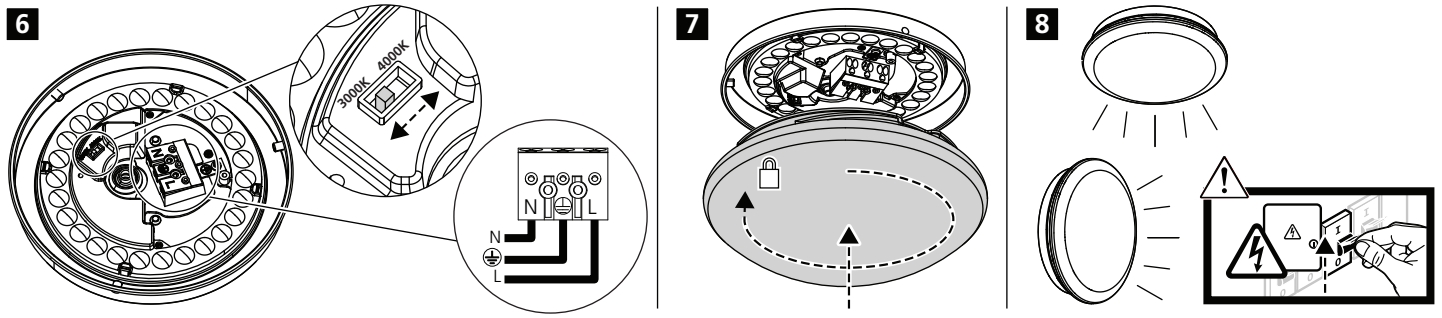
	6W (pcs)	12W (pcs)	18W (pcs)	24W (pcs)
10A C-type	169	85	56	43
16A C-type	277	139	92	71